KWC CAMPUS
Floor standing WC pan

Modell-Linie: CAMPUS | CMPX597S
WCs and urinals | WCs

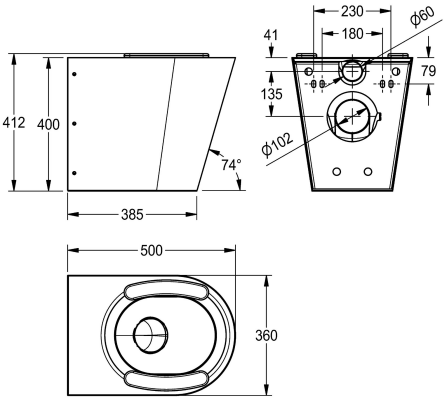

KWC-No.	type of toilet seat
2000100153 Version for installation from the front, with mounting plate and anti-theft screw fixings	no seat
2000100154 With 2 toilet seat pads	synthetic seat pad
3600000655 With black toilet seat	synthetic hinged seat with lid
3600000656 With grey toilet seat	synthetic hinged seat with lid
3600000657 With white toilet seat	synthetic hinged seat with lid

Wall hung WC pan with shroud to the floor, stainless steel, surface satin finished, material thickness 1,5 mm, flushing certificated to EN 997, concealed flushing rim with min. 4 litre flushing capacity, with a shrouded 100 mm diameter horizontal 'P' trap outlet, pressed seat area tapered towards centre, all edges curved, fixing with included mounting plate conform to EN 33, includes safety screws. 4 litre flush EN997 approved.

With seat pads
Dimensions 360 x 412 x 500 mm (W x H x D)

Technical Data

inlet size	DN 55
material	stainless steel
material code	1.4301 Chrome Nickel steel V2A
material thickness	1.5 mm
minimum flushing capacity	4 Liter
outlet size	DN 100
overall depth	500 mm
overall height	412 mm
overall width	360 mm
toilet seat colour	grey
surface finish	satin finished
type of mounting	wall mounting
type of toilet seat	synthetic seat pad
type of WC	wall hung