KWC WASHINO-Step
Children‘s wash-and-play trough

Modell-Linie: WASHINO | SANW211
Washbasins & Washtroughs | Washtroughs

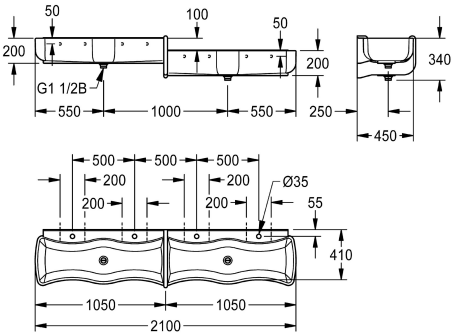

KWC-No.

2000103058
Versions with basin on the top left, bottom right

2000103059
Version with basin on the top right, bottom left

WASHINO-Step children‘s wash-and-play trough made of MIRANIT resin-bonded mineral material, Alpine white colour. Model with basin le ft top/right bottom. With 4 wash places (2 wash places with a height difference of 100 mm). Wave-shaped basins, large inner and outer radii of basins, with integrated surge edge, tap landing with a tap hole for each wash place. Integrated divider with overflow function made of MIRANIT, blue colour (RAL 5002). Waste and overflow valve as a standpipe for 2 wash places each. Each basin with one waste outlet (distance between the outlets 1000 mm). Mounting on washbasin back panel. Mounting material included.

Dimensions 2100 x 340 x 470 mm (W x H x D)

Technical Data

material	mineral material
material code	Miranit
number of waste holes	2
overall depth	470 mm
overall height	340 mm
overall width	2,100 mm
rear upstand	no
splash back	yes
number of tap holes	4
tap ledge	yes
tap ledge position	back
type of mounting	wall mounting
type of waste kit	"1 1/2"" duplex waste with sta
number of wash places	4
waste hole position	centre
waste kit included	yes
waste size	DN 40